RAVAS 2100 Exi INOX

Explosion proof pallet truck scale

BENEFITS

- Stainless steel chassis (AISI 316) and indicator housing (AISI 304)
- Hygienic design
- Accurate measurements under harsh conditions
- Durable and low maintenance
- Suitable for audits and inspections

Top quality

For hazardous areas

APPLICATIONS INOX WEIGHING SYSTEMS

- **Food industry**
  suitable for refrigerated or packaged pallet transport
- **Fish and meat processing**
  resistant to salt, moisture and intensive cleaning
- **Chemical industry**
  safe for use with aggressive substances
- **Pharmaceutical sector**
  can be used in sterile and controlled environments
- **Cleanrooms and laboratories**
  no risk of contamination or pollution

RAVAS

RAVAS 2100 Exi INOX

FUNCTIONS

- Automatic and manual zero correction
- Gross/net weighing
- Automatic tare over the full scale. Pre-set tare maximum first range (200 kg)
- Error messages in display
- Automatic switch-off after 30 minutes of non-use
- Low battery warning in display

STANDARD SPECIFICATIONS

Weighing capacity	2,000 kg
Graduation	multirange: 0 - 200 kg: graduation 0.2 kg 200 - 500 kg: graduation 0,5 kg 500 - 2.000 kg: graduation 1 kg
Max. tolerance	0.1% of the load lifted
System certification	II 2 G Ex ib IIB T4 Gb & II 2 D Ex ib IIIC T135°C Db, approval number DEKRA 13ATEX 0044
Display	LCD, digit height 18 mm
Keypad	foil keypad, 3 function keys, on/off key, resistant to chemicals
Protection class	load cells IP67, indicator IP65
Chassis	stainless steel AISI 316
Other steel parts	stainless steel AISI 304 bead blasted
Battery	intrinsically safe, approval number DEKRA 13ATEX 0043, 8Vdc/3.5 Ah, rechargeable, exchangeable, maintenance free
Battery life	100 hours, low battery indication
Charger	230V/8Vdc - 1 A; for use outside hazardous zone
Charging time	approximately 8 hours
Steering wheels	rubber, antistatic
Loading wheels	nylon, tandem
Pump	quick lift, stainless steel

DIMENSIONS IN MM

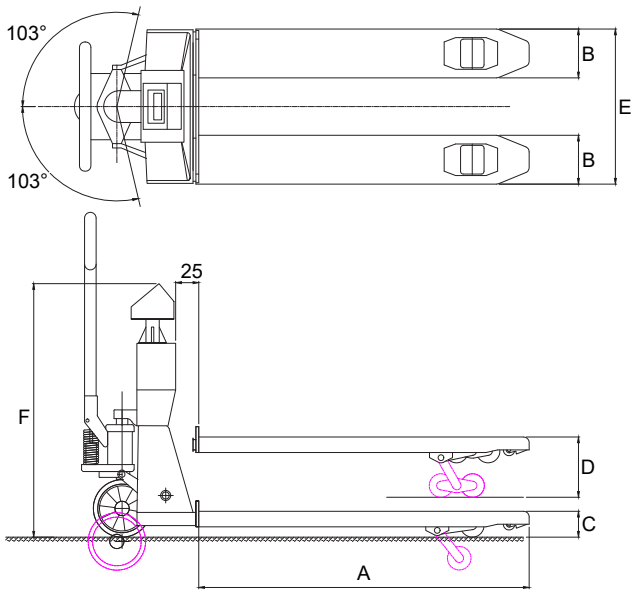

		Professional
A	Fork length	1150
B	Fork width	170
C	Minimum fork height	90
D	Maximum fork height	202
E	Width over forks	540
F	Height to top indicator	

For approved versions, class OIML III : European approval no. T2782, switch-of of display when tilting more than 2°. Graduation: multirange 0.5/1 kg, or one of the following fixed graduations:

- 1.000 divisions: 1,0/1.000 kg or 2,0/2.000 kg
- 2.000 divisions: 0,5/1.000 kg or 1,0/2.000 kg

OPTIONS*

- Extra exchangeable battery pack
- Data transfer to PDA devices that have Bluetooth® technology
- Legal for trade version, OIML III
- Rotating indicator
- Big push buttons for use with gloves

RAVAS Europe B.V.

Veilingweg 17, 5301 KM Zaltbommel, The Netherlands

T: +31 418 515220 E: salesoffice@ravas.com

WWW.RAVAS.COM

Management System ISO 9001:2015 ISO 14001:2015 ISO 45001:2018 www.tuv.com ID 0000037200

* The use of options may change related specifications. Changes reserved rev. 20260202