HAND PALLET TRUCK SCALES

RAVAS-TOUCH GMP

Hygienic stainless steel hand pallet truck

BENEFITS

- Minimal maintenance, easy cleaning and high resistance to corrosion
- Manufactured 100% in stainless steel 304L (1.4307) or 316L (1.4404), including all hydraulic parts
- Open under-fork construction, closed fork-shoe, for maximum hygiene
- Hydraulic equipment contains food grade oil
- Continuous weld: welds are polished
- Electro polishing, for very smooth surfaces

Hygienic

For industrial use

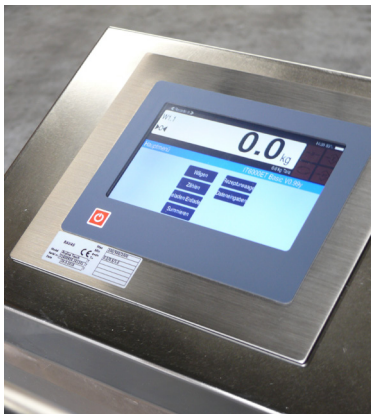

RAVAS

RAVAS-TOUCH GMP

FUNCTIONS

- Automatic and manual zero correction
- Gross/net weighing
- Automatic and manual tare via touch screen
- Entry of alphanumeric codes
- Totalling with sequence number
- Piece counting by sampling or entry of piece weights
- Error messages in display
- Internal clock
- USB port for data capture

STANDARD SPECIFICATIONS

Weighing capacity	5,000 lb
Graduation	multirange: 0 - 400 lb: graduation 0.2 lb 400 - 1,000 lb: graduation 0.5 lb 1,000 - 5,000 lb: graduation 1.0 lb
Max. tolerance	0.08% of the load lifted
Display	18 cm / 7.1 inch, high resolution touch screen
Protection class	load cells IP67, indicator IP65
Battery	12V, by 4 exchangeable battery modules 6V - 4,8Ah
Battery life	12 hours, charging time 6 hours
Charger	110V NiMH charger included
Steering wheels	nylon
Loading wheels	nylon, single
Pump	ergonomic lift
Own weight	375 lb

HYGIENIC CONSTRUCTION

- All bearings are waterproof and self-lubricated
- All moveable parts have polymer bearings, free of lubrication
- Pump function with plastic coated stainless steel cable (no chain)
- Internal dashboard with on/off switch, fuse and USB port
- Completely silicon free

DIMENSION

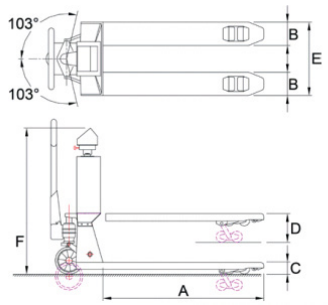

A	Fork length	48”
B	Fork width	7.1”
C	Minimum fork height	3.0”
	Space underneath fork	0.7”
D	Maximum fork height	7.9”
	Lifting height	4.8”
E	Width over forks	27.2”
F	Height	48”

Management System
ISO 9001:2015
ISO 14001:2015
ISO 45001:2018
www.tuv.com
ID 0000037200

OPTIONS*

- Client specific software
- 4 extra exchangeable batteries
- (internal) USB output for transfer stored weighing data
- External printer connected by bluetooth to the indicator
- Bluetooth or WLAN output
- Legal for trade version, NTEP
- Rotating indicator
- 0.2 lb graduation, maximum 2,000 lb capacity

RAVAS USA

1500 Enterprise Parkway, Twinsburg, Ohio 44087

T: 330.425.3092 E: salesoffice-usa@ravas.com

WWW.RAVAS.COM

* The use of options may change related specifications. Changes reserved rev.20230228