RAVAS-226x

Explosion proof pallet truck scale

FM APPROVED

BENEFITS

- For safe weighing in hazardous areas
- FM approved for USA and Canada
- Large, 6-digit LED display
- Rechargeable and exchangeable battery
- Rotating display, visible from all sides during dosing operations
- Stainless steel fork cover
- 10x higher display resolution for mixing and batching

Top quality

For hazardous areas

RAVAS PERFORMANCE LINE

RAVAS

RAVAS-226x

FUNCTIONS

- On/off key
- Automatic and manual zero correction
- Automatic tare by push button
- Automatic switch-off after 30 minutes of non-use
- 10x higher display resolution
- lb/kg toggle

STANDARD SPECIFICATIONS

Weighing capacity	5,000 lb
Graduation	1 lb
Max. tolerance	0.1% of the load lifted
Display	6 digits, 1.2 inch
Protection class	NEMA 4 / IP65
Battery cycle time	70 hours
Charging time	approximately 6 hours
Steering wheels	rubber, antistatic
Loading wheels	polyurethane, single
Own weight	330 lbs
Finishing / Color	epoxy coated / red, RAL3000
FM Certification	Class I,II,III Division 1, Groups A-G, Temperature class T4, Ta = 104 F

DIMENSIONS IN INCHES

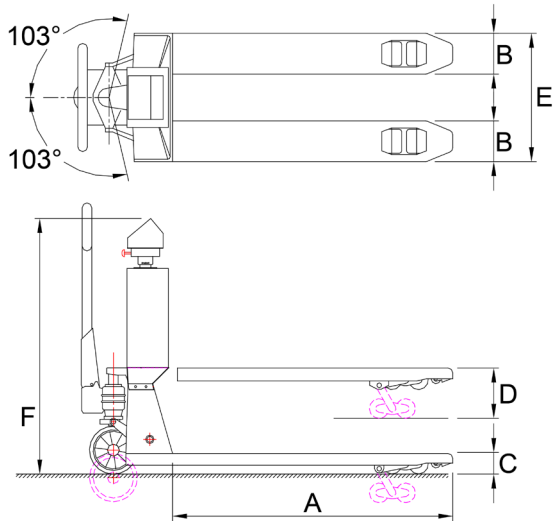

A	Fork length	48
B	Fork width	6,7
C	Minimum fork height	3,25
D	Maximum fork height	8
	Lifting height	4,75
E	Width over forks	27
F	Height to top indicator	43

OPTIONS*

- Extra rechargeable and exchangeable battery pack
- Footbrake
- Graduation: 0-5000 lb x 0.5 lb
- FlexBolt technology for extra small graduation; 0-2000 lb x 0.2 lb
- Width over forks 22 inch
- Stainless steel chassis with stainless steel housing (WOF = 22”; L = 45.3”; H = 3.5”; B = 7.1”)

* The use of options may change related specifications

RAVAS USA, INC.
1500 Enterprise Parkway
Twinsburg, OH 44087
T: +1 (330) 425 3092
www.ravasusa.com

RAVAS

* The use of options may change related specifications. Changes reserved rev.20210517